EWT-11-0311

* RoHS Compliant *

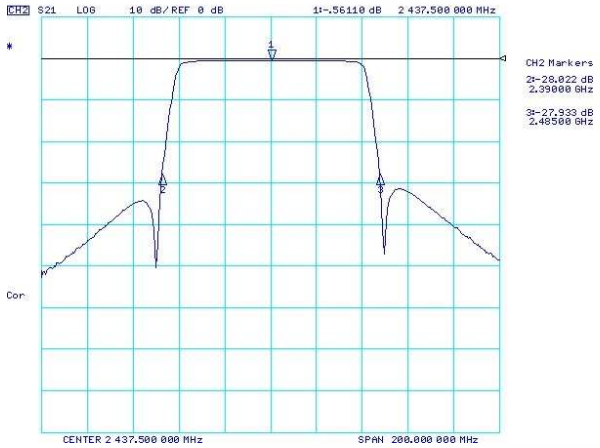

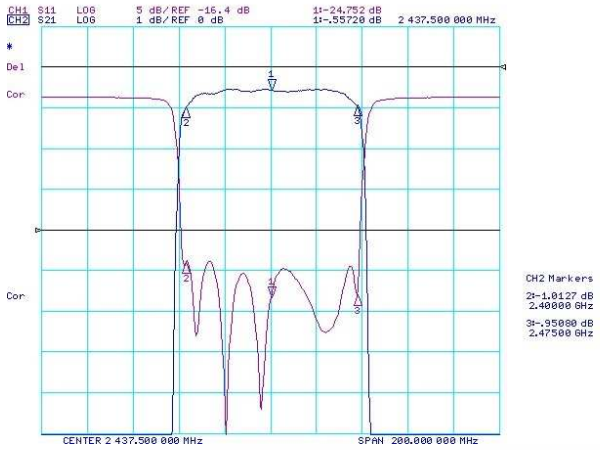

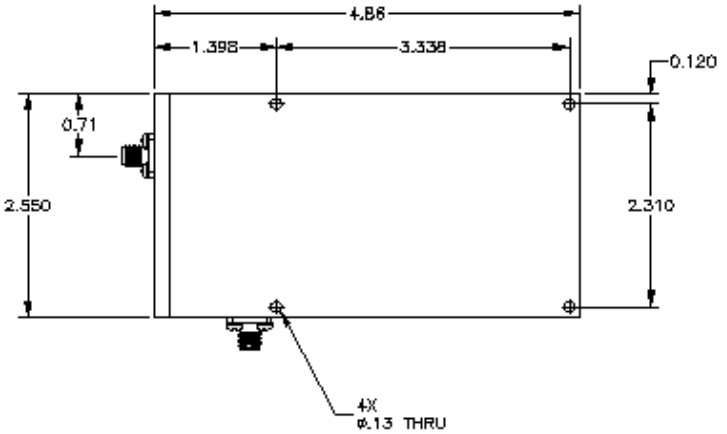

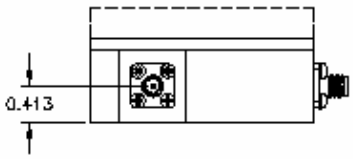

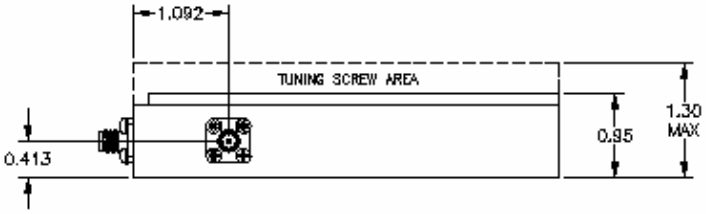

Passband	2400 to 2475 MHz min.
Passband Insertion Loss	1.5 dB max.
Passband VSWR	1.5:1
Rejection	>25 dB from DC to 2390 MHz
	>25 dB from 2485 MHz to 6000 MHz
Connectors	SMA Female

Eastern Wireless TeleComm, Inc.

2040 Shipley Dr., Suite 5
Salisbury, MD 21801, USA

www. ewtfilters .com

410. 749. 3800
410. 749. 4852 (Fax)